*******IT IS ESSENTIAL THAT THESE INSTRUCTIONS ARE HANDED TO USER AFTER FITTING*******

# Fitting Instructions

TOWBAR **C24A**
For **CITROEN SAXO & PEUGEOT 106 1996-**

**MATERIALS**

| | | |
|---|---|---|
| A | 1 | Towbar Mainframe |
| C | 1 | Centre Tube European facing to 94/20/EC A50-1 |
| D | 2 | M10 x 30 mm x 1.5 mm Bolts, Nuts, Lock Washers and Flat Washers (20mm O.D.) |
| D1 | 1 | Side Arm |
| E | 1 | M10 x 30 mm x 1.5 mm Bolt, Lock Washer and Flat Washer (20mm O.D.) |
| E1 | 1 | Cleat |
| F1 | 4 | Spreader plates with captive M10 x 30mm Bolts, Nuts, Lock Washers and Flat Washers (20mm O.D.) |
| G | 2 | M12 x 80 mm x 1.75 mm Bolts and Disc Spring Washers |
| G1 | 1 | Captive Nuts |
| EP | 1 | Electrical Plate |
| CB | 2 | M16 x 50mm Coupling Bolts, Nuts and Lock Washers |

**FITTING**

1. Lower and remove spare wheel.
2. Insert Spreader Plates (F1) inside rear cross member between bumper and rear panel and loosely attach Towbar Mainframe (A) to vehicle using Nuts and Washers provided.
3. Lift up floor covering inside boot and remove caps covering hole above frame (this can be achieved by using a screwdriver through the holes in the frame from below). Insert remaining Spreader Plates (F1) inside frame above and loosely attach to holes in side arms of Towbar Mainframe (A) using Nuts and Washers provided.
4. Loosely attach Side Arm (D1) to Towbar Mainframe (A) using Bolts (D) and Flat Washers. Locate the forward mounting in vehicle chassis and enlarge the square aperture to allow Cleat (E1) to be inserted and loosely secure sidearm using Bolt (E) and Flat Washer.
5. Loosely attach Centre Tube (C) to Cross Bar (A) using Bolts (G) with Electrical Plate (EP) and Disc Spring Washers. Tighten all bolts and refit spare wheel.

**Note: Remove Towball/Neck using wheelbrace when not in use to avoid number plate obscuration. (Peugeot only)**
**Note:** This towbar must be used with either a Witter Towball (part number Z1) or Class A50-1 or A50-X towball dimensionally Conforming to A50-1 with a 'D' and 'S' value greater than or equal to that of the towbar.
Please refer to the vehicle specification for the trailer weight and nose limits, which **must be observed**.
**Recommended torque settings:** M8 - 27Nm, M10 - 53 Nm, M12 - 95 Nm , M14 - 150 Nm, M16 - 214 Nm

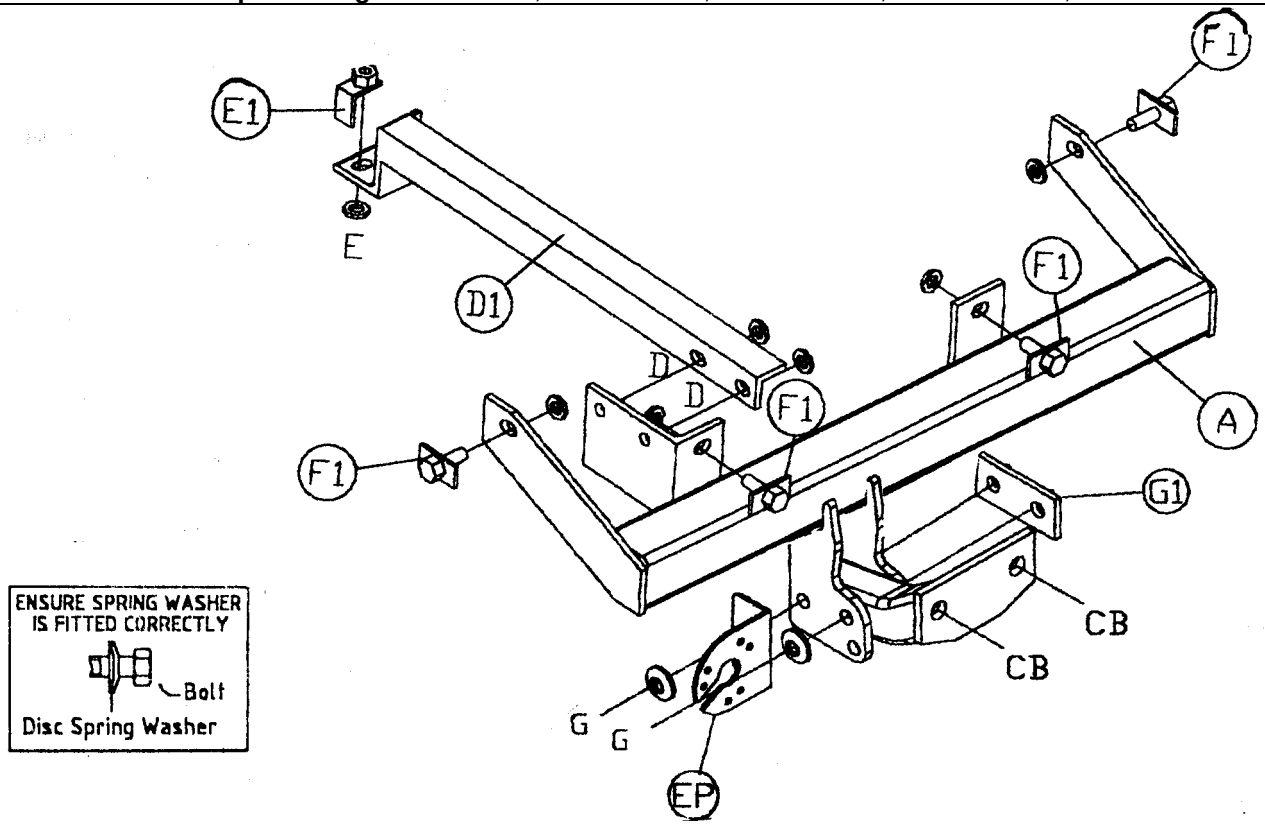


**WITTER TOWBARS** Deeside Ind. Park, Deeside, CH5 2NY Tel: 01244 284500 Fax: 01244 284577